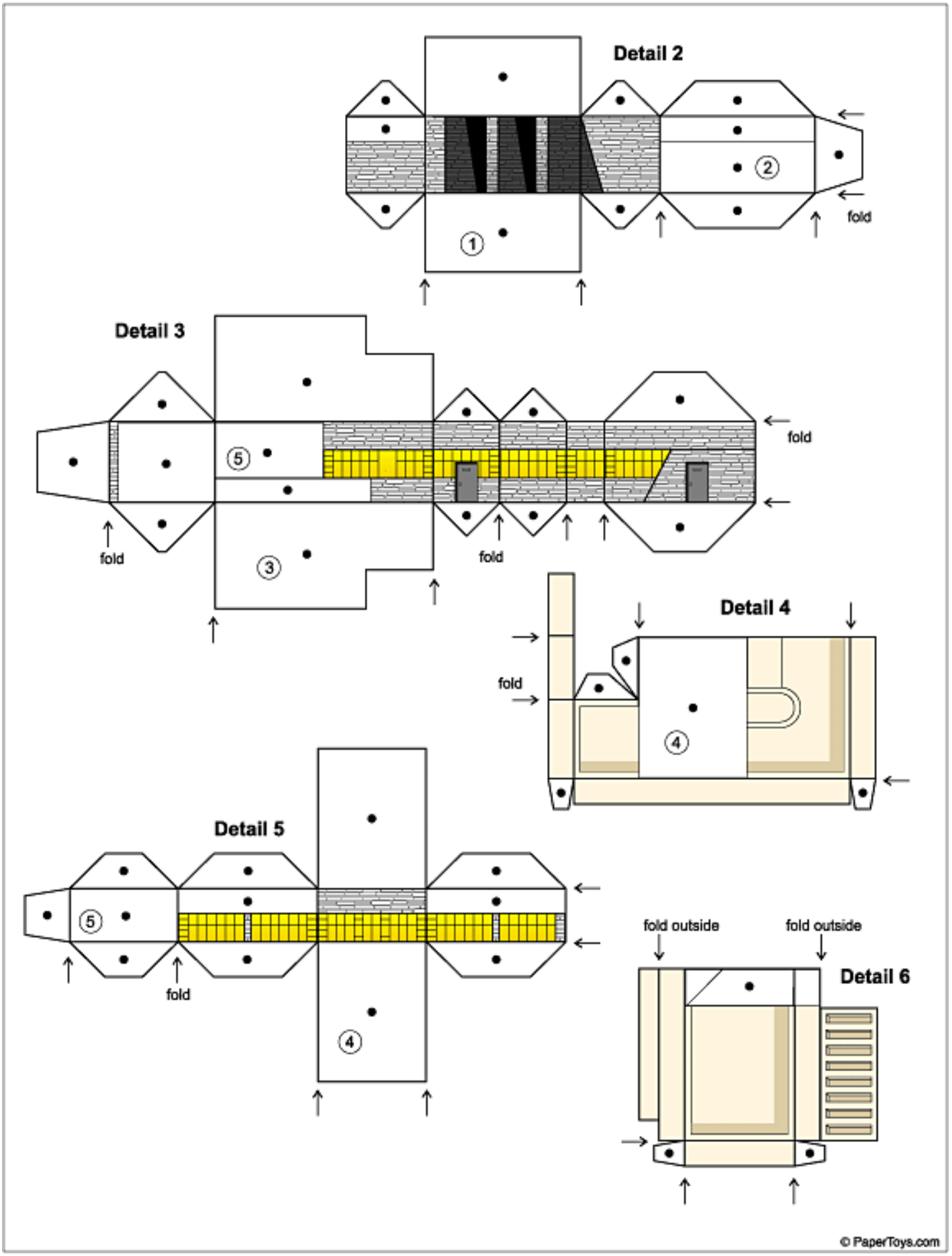
Detail 2
1
2
fold
Detail 3
5
3
fold
fold
fold
Detail 4
fold
4
Detail 5
5
fold
4
fold outside
fold outside
Detail 6
© PaperToys.com

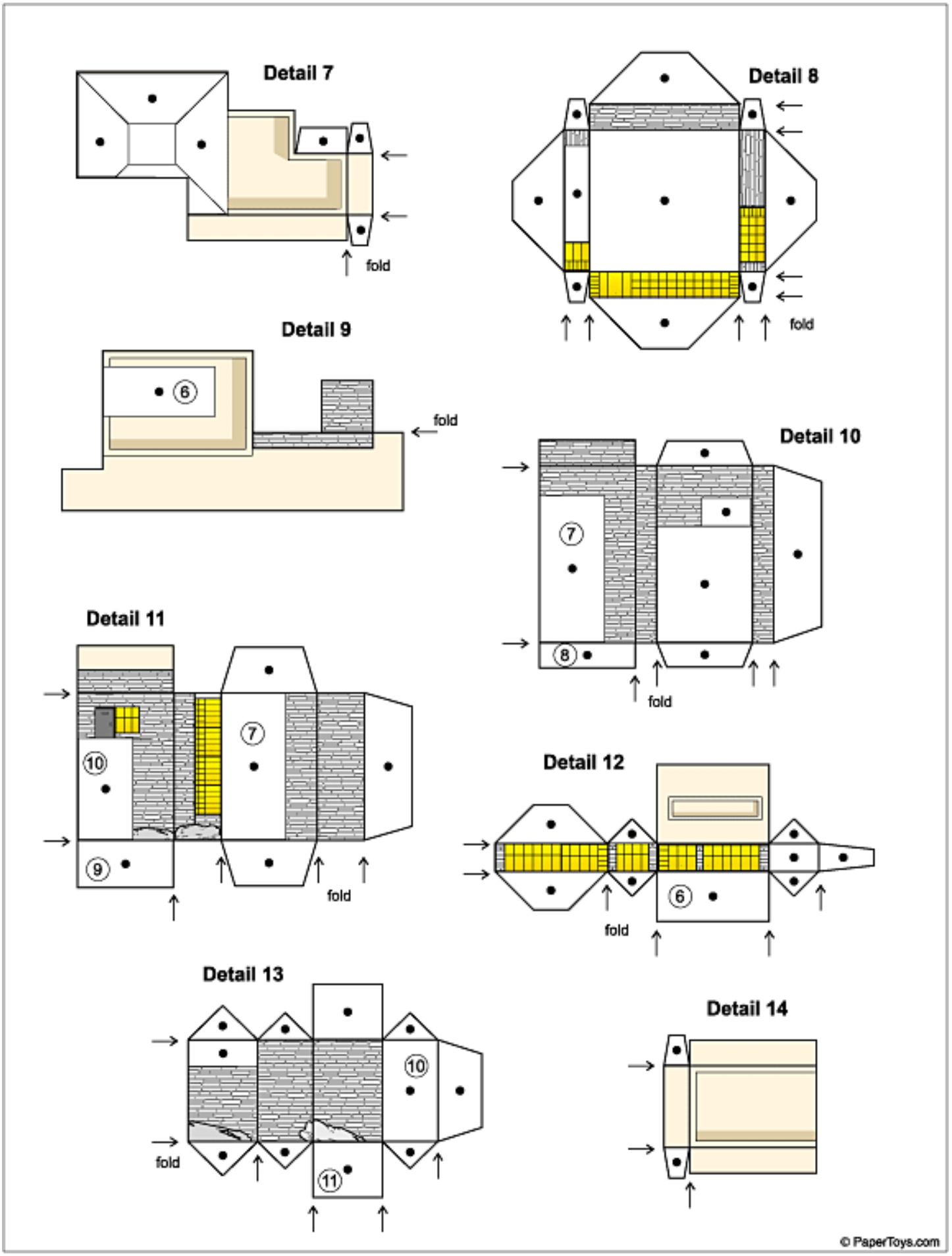
Detail 7
fold
Detail 8
fold
Detail 9
6
fold
Detail 10
7
8
fold
Detail 11
10
7
9
fold
Detail 12
6
fold
Detail 13
10
11
fold
Detail 14
© PaperToys.com

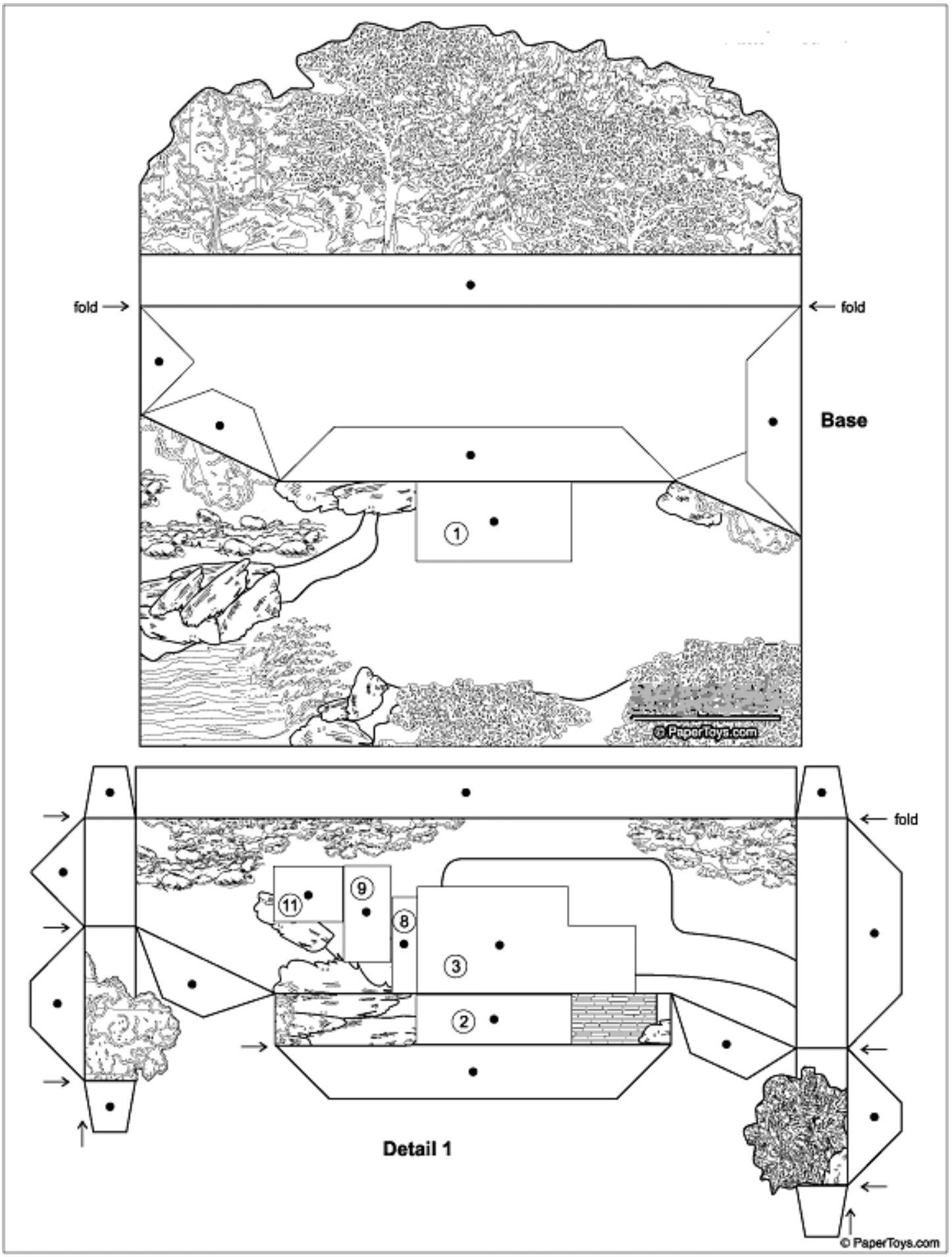
fold
fold
Base
1
© PaperToys.com
fold
11
9
8
3
2
Detail 1
© PaperToys.com

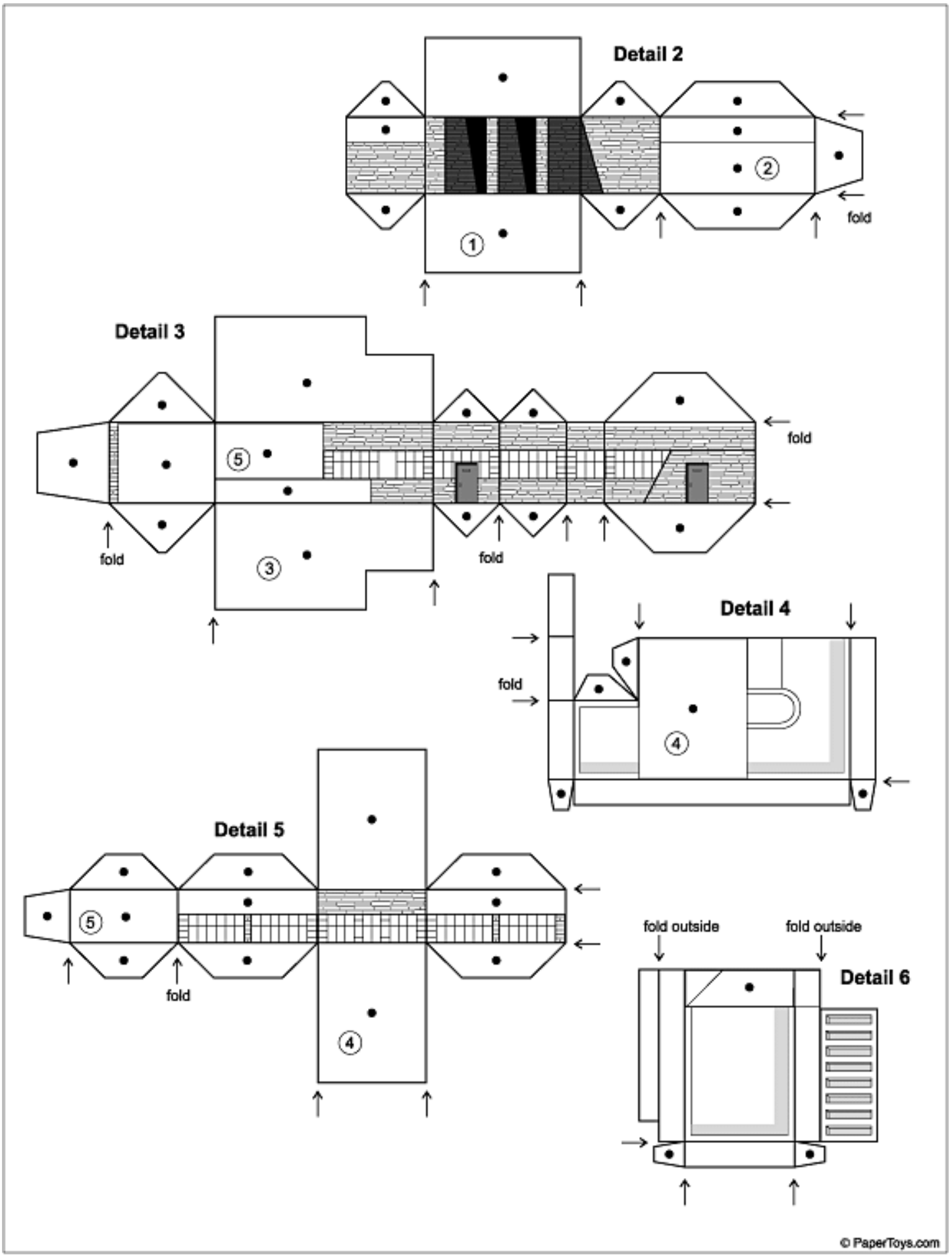
Detail 2
1
2
fold
Detail 3
5
3
fold
fold
fold
Detail 4
fold
4
Detail 5
5
fold
4
fold outside
fold outside
Detail 6
© PaperToys.com

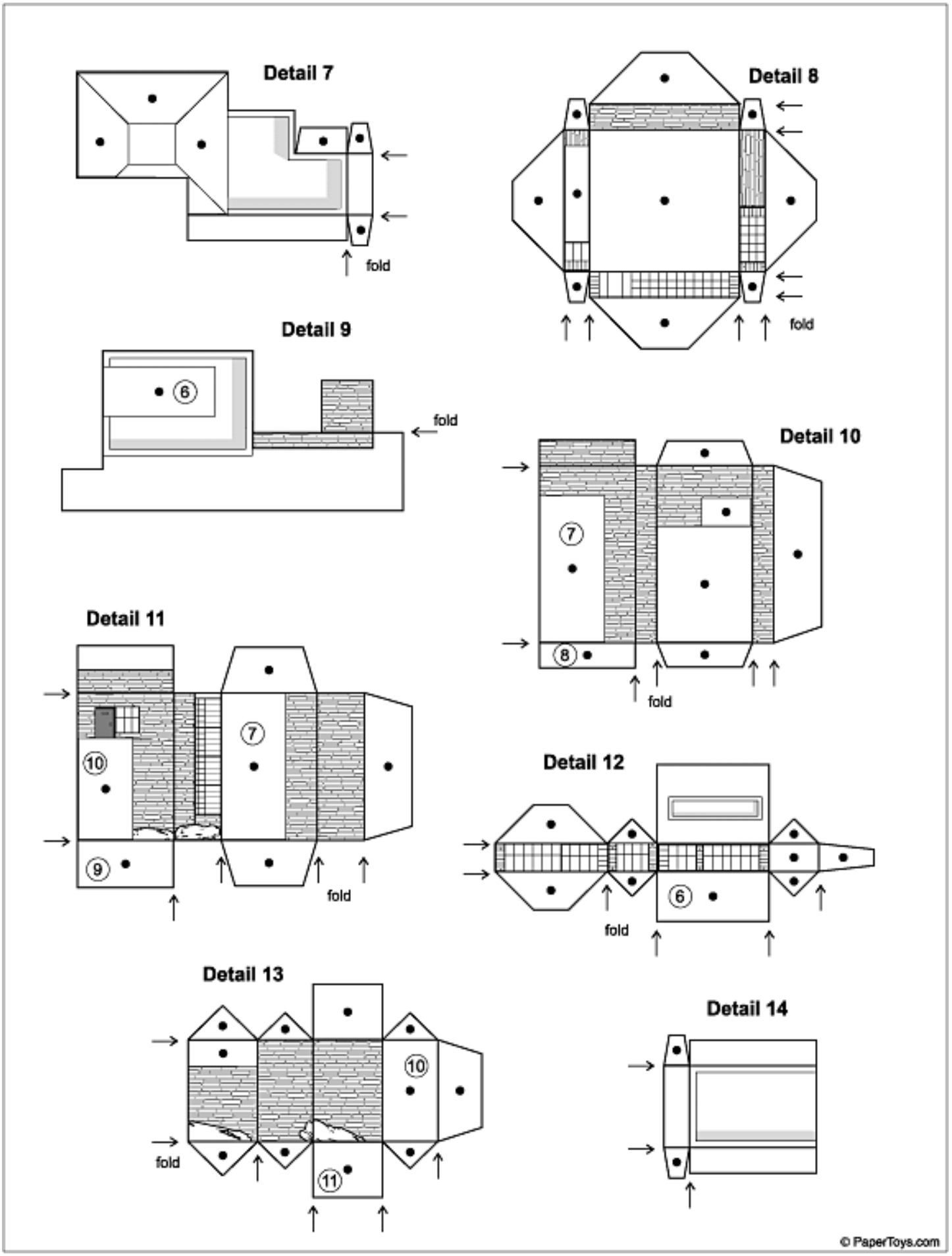
Detail 7
fold
Detail 8
fold
Detail 9
6
fold
Detail 10
7
8
fold
Detail 11
7
10
9
fold
Detail 12
6
fold
Detail 13
10
11
fold
Detail 14
© PaperToys.com

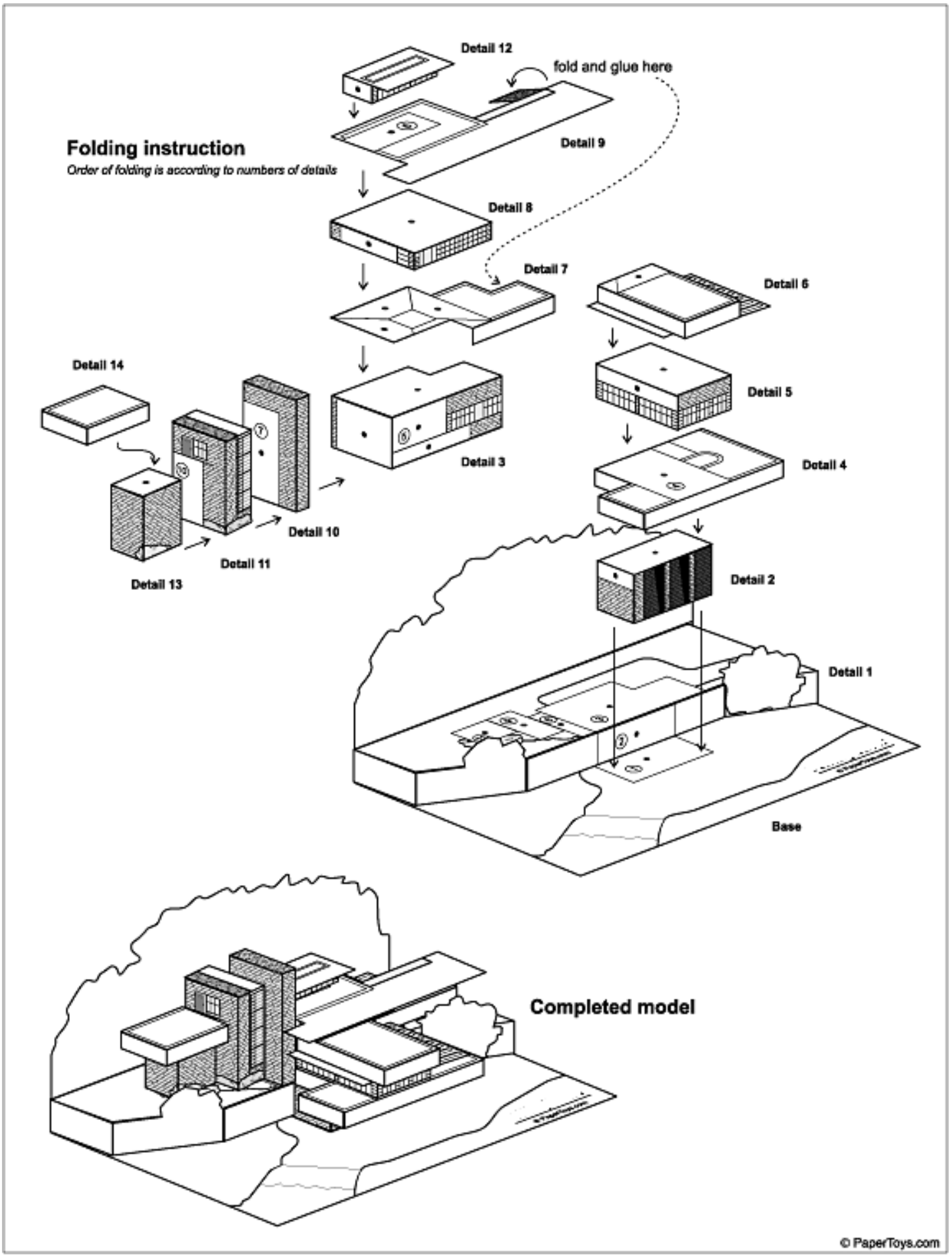
Folding instruction
Order of folding is according to numbers of details
Detail 12
fold and glue here
Detail 9
Detail 8
Detail 7
Detail 6
Detail 14
Detail 5
Detail 3
Detail 4
Detail 10
Detail 11
Detail 13
Detail 2
Detail 1
Base
Completed model
© PaperToys.com